LIVARNO home

HALLOWEEN PUMPKIN CARVING SET

GB CY
HALLOWEEN PUMPKIN CARVING SET
Operating and safety information

RO
SET PENTRU SCULPTAT DOVLECI
Indicații de operare și siguranță

GR CY
ΣΕΤ ΕΡΓΑΛΕΙΑ ΓΙΑ ΣΚΑΛΙΣΜΑ ΚΑΙ ΚΑΘΑΡΙΣΜΟ ΚΟΛΟΚΥΘΑΣ
Οδηγίες λειτουργίας και ασφαλείας

DE AT CH
KÜRBIS-SCHNITZSET
Bedienungs- und Sicherheitshinweise

IAN 448081_2301 RO GR

PDF ONLINE
www.lidl-service.com

citygate24 GmbH
Altstädter Straße 8
20095 Hamburg
GERMANY

06/2023
Model No.: 1183-11
10/2023

A

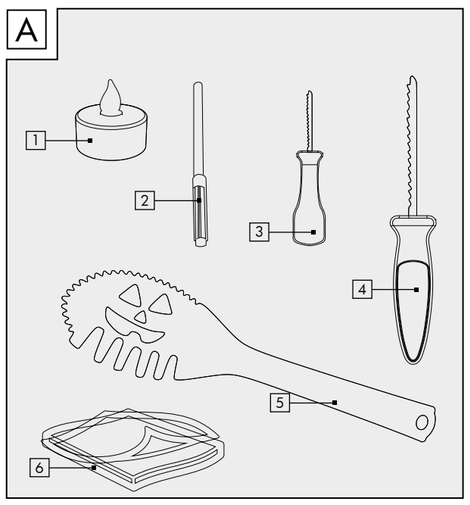

B

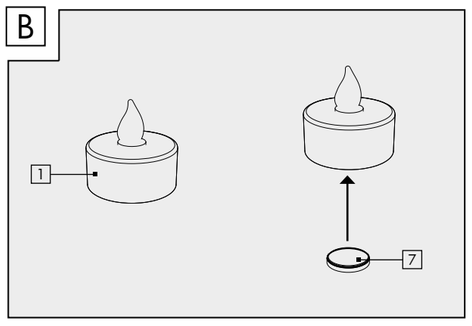

GB CY

Halloween Pumpkin Carving Set

Introduction

Congratulations on the purchase of your new product. You have chosen a high-quality product. Please read these operating instructions thoroughly and carefully. These instructions are an essential part of the product and contain important information on first-time use and handling. Always observe all safety instructions. If you have any questions or are unsure how to operate the product, please contact your retailer or service centre. Please keep this manual in a safe place and pass it on to third parties where necessary.

Explanation of symbols

- Read the operating instructions!
- Issue date of user instructions (month/year)
- Date of manufacture (month/year)
- Direct current
- Risk of fatal injury and accidents for infants and children!
- Observe warning notices and safety instructions!
- Explosion hazard!
- Wear protective gloves!
- This symbol indicates that the product operates with safety extra-low voltage (SELV / PELV, protection class III).
- Suitable for indoor use only
- 1x CR2032 battery included in delivery
- Battery included
- Keep out of reach of children
- Do not use violence!
- Never use different systems, brands and types at the same time!
- Do not insert the wrong way round, observe polarity (+ / -)!
- Do not throw into the fire!
- Do not throw it into the water!
- Do not short-circuit! Batteries can explode or leak.
- Never mix new and used batteries!
- Do not recharge!
- Do not disassemble / open!
- Dispose of packaging and product in an environmentally friendly manner!
- Risk of environmental damage from incorrect disposal of (rechargeable) batteries!
- Packaging made of FSC-certified wood mix
- With the CE label, the manufacturer confirms that this product complies with the applicable European directives.

Intended use

Not suitable for children under 12 years.
This product is only suitable for decorative purposes. This product is intended exclusively for indoor use in dry and enclosed spaces. The LED decorative tea light must not be placed inside the pumpkin when it is not in an enclosed space. The product is not suitable for general indoor lighting in the home or for commercial use. This product is intended for use in private households only. Any type of use other than that described above or any modification of the product is prohibited and likely to cause damage or even personal injury. The manufacturer or retailer accepts no liability for loss or damage that occurs as a result of improper or incorrect use.

Included in package

1x LED decorative tea light
1x pumpkin scraper
1x large saw
1x small saw
1x pen
1x battery (CR2032)
6x carving templates
1x user instructions

Description of parts

1 LED decorative tea light
2 Pen
3 Small saw
4 Large saw
5 Pumpkin scraper
6 Carving templates
7 Battery
8 Carving templates

Technical specifications

Model number:	1183-11
Input:	1 x CR 2032, 3 V⎓; 0,08 W
Protection class:	III
Light colour:	warm white

Safety instructions

Safety instructions

⚠ WARNING!

RISK OF FATAL INJURY AND ACCIDENTS TO INFANTS AND CHILDREN! Never leave children unsupervised with the packaging material. There is a danger of suffocation from the packaging material. Children often underestimate the dangers. Always keep children away from the product..

- **Caution!** Only for use under adult supervision.
- **Caution!** Keep tools out of reach of children after use.
- Cleaning and battery replacement may not be carried out by children.
- Keep the product away from children until you have removed the protective strip from the battery compartment.
- Do not use the product if you notice any defects.
- Protect the product from sharp edges, mechanical stress and hot surfaces.
- Do not immerse the product in water or any other liquids.
- The LEDs are not replaceable.

Safety Instructions for (Rechargeable) Batteries

- **RISK OF FATAL INJURY!** Keep (rechargeable) batteries out of the reach of children. If swallowed, seek medical advice immediately!
- **EXPLOSION HAZARD!** Never recharge non-rechargeable batteries. Do not short-circuit or open (rechargeable) batteries. They could overheat, cause a fire or explode.
- Never throw (rechargeable) batteries into fire or water.
- Do not expose (rechargeable) batteries to mechanical stress.
- Do not use different battery types or use new and used batteries together.
- Insert the supplied batteries into the product, taking care to ensure correct polarity.
- Do not short-circuit the terminals!
- Remove empty batteries from the product.
- **Caution!** This product contains a coin battery (button cell containing lithium). Coin batteries can cause severe internal chemical burn injuries when swallowed.
- **Caution!** Dispose of spent batteries immediately. Keep the batteries out of reach of children! If a battery is swallowed, seek medical advice immediately.

Risk of (rechargeable) batteries leaking

- Avoid exposing (rechargeable) batteries to extreme conditions and temperatures, e.g. radiators or direct sunlight.
- Avoid contact with skin, eyes and mucous membranes! In the event of skin contact with battery acid, rinse the affected area immediately with plenty of clean water and seek medical advice immediately!
- **WEAR PROTECTIVE GLOVES!** Leaking or damaged (rechargeable) batteries can cause chemical burns if they come into contact with skin. Therefore, wear suitable protective gloves in such cases.
- In the event that a battery leaks, remove it from the product immediately to avoid damage.

Setup

Instructions: Take the product out of its packaging and remove all packing material.
- Check that all package contents are present.
- Check if the product or individual parts are damaged. If that is the case, do not use the product. Please contact the retailer via the service address indicated on the warranty card.
- Keep the product away from children until you have removed the protective strip from the battery compartment.
- The batteries supplied are already inserted into the product and fitted with an isolator strip. Remove this plastic strip to start using the product.

Inserting/replacing the batteries

- **RISK OF FATAL INJURY!** Please note that the batteries must only be replaced by adults. Ensure that the battery compartment is firmly closed. Batteries can be lethal when swallowed!

☐ The battery compartment is located on the bottom of the LED decorative tea light 1 (see Fig. B).
☐ Undo the screws to open the battery compartment and remove the discharged battery.
☐ Now insert a new battery (CR2032).
☐ **Please note:** It is essential to pay attention to the correct polarity.
☐ Close the battery compartment lid and refasten the screws to seal it.

Operation

CAUTION! Never leave children unsupervised when using the product! Only for use under adult supervision.
LED decorative tea light: The ON/OFF switch is located on the bottom of the LED decorative tea light 1 (see Fig. X). Push the switch to the ON position to switch the product on. The flame will now illuminate with a natural flickering effect. Push the switch to the OFF position to switch the product off.

CAUTION! Once the LED light or the LED decorative tea light has been placed inside the pumpkin, the pumpkin is no longer suitable for consumption. Pumpkin scraper: The pumpkin scraper 5 (see Fig. A) is designed for removing the flesh and seeds from inside the pumpkin.
Small saw / Large saw: You can use the saws 3 / 4 (see Fig. A) for precise carving.
Pen: You can use the pen 2 (see Fig. A) to transfer the carving template patterns onto the pumpkin.

CAUTION! Once you have drawn on the pumpkin with the pen, the pumpkin is no longer suitable for consumption. Carving templates: The carving templates 6 make it easier to design the pumpkin.

Cleaning and storage

- Do not immerse the LED decorative tea light in water. Make sure that no water gets into the casing.

☐ Use only a dry, lint-free cloth for cleaning. If the product is very dirty, dampen the cloth slightly.
☐ When the product is not in use, store inside the packaging in a dry place.
☐ You can clean the carving tools 3 / 4 / 5 under running water. Do not use any aggressive cleaning agents.

Troubleshooting

● = Fault
◉ = Cause
○ = Solution
● = The LED decorative tea light 1 is not switching on.
◉ = The product is switched off.
○ = Turn the product on (see section "Operation")
◉ = The batteries are discharged.
○ = Replace the batteries (see "Replacing the batteries").

Disposal

Note the labels on the packaging materials when sorting the waste; they are marked with abbreviations (a) and numbers (b) with the following meanings:
1-7: Plastics
20-22: Paper and cardboard
80-98: Composite materials

You can find out how to dispose of the used product by contacting your local district or city council.

In the interest of environmental protection, when the product has reached the end of its useful life, do not dispose of it as general household waste but have it properly recycled. For information on recycling centres and their opening times, please contact your local council.

Faulty or used batteries must be recycled in accordance with Directive 2006/66/EC and its amendments. Return batteries and/or the product to the local recycling facilities provided.

Risk of environmental damage from incorrect disposal of rechargeable batteries!
Batteries must not be disposed of as general household waste. They may contain toxic heavy metals* and are subject to special waste treatment. Batteries and rechargeable batteries that are not permanently fixed inside the product must be removed before disposal of the product and disposed of separately. Please ensure batteries/rechargeable batteries are fully discharged when disposed of! Wherever possible, use rechargeable batteries rather than single-use batteries.
*) Marked as followed: Cd = cadmium, Hg = mercury, Pb = lead

Warranty

Dear customer, This product comes with a 3-year warranty from the date of purchase. In the event that this product is faulty, you have legal rights against the seller of the product. These statutory rights are not restricted by our warranty as set out below.

Warranty terms
The warranty period begins with the date of purchase. Please keep the original receipt in a safe place. It is required as proof of purchase. If a material or manufacturing defect occurs within three years of the date of purchase, we will repair or replace the product for you free of charge, or refund the purchase price, at our discretion. This warranty service is granted provided that the faulty device and the proof of purchase (receipt) are presented within three years, along with a brief written description of the fault and of when it occurred. If the fault is covered by our warranty, we will return the fixed product or send you a new one. No new warranty period shall begin upon repair or replacement of the product.

Warranty period and statutory warranty claims
The warranty period is not renewed after a warranty service has been granted. This rule shall also apply for any replaced or repaired parts. Any damage or faults that already existed when buying the product must be reported immediately upon unpacking the product. A fee is charged for any repairs that are carried out after the end of the warranty period.

Warranty scope
The device was carefully manufactured according to the strictest quality guidelines and thoroughly tested before delivery. The warranty applies to material or manufacturing defects. This warranty does not apply to product parts that are subject to normal wear and tear and can therefore be regarded as wearing parts, or damage to fragile parts, such as switches, rechargeable batteries or parts that are made of glass. This warranty is void if the product has been damaged, improperly used or serviced. To ensure proper use, all instructions included in the manual must be followed carefully. All uses and actions that users are discouraged from or warned of in the manual must be avoided under all circumstances. The product is intended for private household use only, and not for commercial activities. The warranty is void, if the product is treated inappropriately, if force is applied, and in the case of any manipulation that is not carried out by our authorised service branch.

Warranty processing
To ensure your request is handled swiftly, please observe the following
Notes:
☐ Please have the receipt and the article number (e.g. IAN 123456) ready as proof of purchase for all enquiries.
☐ Please refer to the type plate on the product, an engraving on the product, the cover of the manual (bottom left) or the sticker on the back or base of the product to find out the product number.
☐ In the case of any malfunctions or other defects, please call or email the service department indicated below as a first step.
☐ After your product has been registered as faulty, you can send it to the specified service address, free of charge. Please include the proof of purchase (receipt) and information about the defect and about when it occurred.

Service

GB
Service Great Britain
Tel.: 00800 80040044
E-Mail: administration@mynetsend.de

CY
Service Cyprus
Tel. : 00800 80040044
E-Mail: administration@mynetsend.de

IAN 448081_2301

Please have the receipt and the article number (e.g. IAN 123456) ready as proof of purchase for all enquiries.

You can find an up-to-date version of the operating instructions at: www.citygate24.de

You can download this and many other manuals, product videos and installation software at **www.lidl-service.com**.
Scanning the QR code on the front page will take you directly to the Lidl Service web page (www.lidl-service.com) where you can access the user instructions by entering the item number (IAN) 123456_7890.

RO

Set pentru sculptat dovleci

Introducere

Vă felicităm pentru achiziționarea noului dumneavoastră produs. Ați luat decizia de a cumpăra un produs de mare valoare. Vă rugăm să citiți cu atenție și în întregime acest manual de utilizare. Acest manual apartine produsului și conține indicații importante pentru punerea în funcțiune și manipularea acestuia. Vă rugăm să acordați atenție deosebită tuturor indicațiilor de siguranță. Dacă aveți întrebări sau nu sunteți sigur cu privire la manipularea produsului, vă rugăm să vă adresați distribuitorului dumneavoastră sau atelierului service din proximitatea dumneavoastră. Vă rugăm să păstrați cu grijă acest manual și să-l transmiteți terților dacă situația o impune.

Explicația desenelor

- Citiți manualul de utilizare!
- Data emiterii manualului de utilizare (lună/an)
- Data producerii (luna/an)
- Tensiune constantă
- Pericol de accidentare și de deces pentru copii!
- Respectați indicațiile de siguranță și avertismentele!
- Pericol de explozie!
- Purtați mănuși de protecție!
- Acest simbol indică faptul că produsul funcționează cu tensiune mică de protecție (SELV/PELV) (clasa de protecție III).
- Adecvat doar pentru spații interioare
- Baterii 1x CR2032 incluse
- Baterie inclusă
- A nu se păstra la îndemâna copiilor
- Nu folosiți violența!
- Nu folosiți niciodată sisteme, mărci și tipuri diferite în același timp!
- Nu inserați invers, respectați polaritatea(+ / -)!
- Nu aruncați în foc!
- Nu-l aruncați în apă!
- Nu scurtcircuitați! - Bateriile pot să explodeze sau să curgă.
- Nu amestecați niciodată bateriile noi cu cele uzate!
- Nu reîncărcați!
- Nu dezasamblați / deschideți!
- Eliminați ambalajul și produsul într-un mod ecologic!
- Daune aduse mediului înconjurător prin eliminarea necorespunzătoare a bateriilor/acumulatorilor!
- Ambalaj din mix de lemn certificat FSC
- Prin marcajul CE producătorul confirmă că acest produs corespunde directivelor europene în vigoare.

Destinația utilizării

Adecvat doar pentru copii mai mari de 12 ani.
Acest produs este conceput exclusiv în scopuri decorative. Acest produs este conceput exclusiv pentru utilizarea în spații interioare uscate și închise. Lumânarea pastilă decorativă cu LED nu trebuie să fie plasată în dovleac dacă aceasta nu se află în spații închise. Produsul nu este adecvat pentru iluminarea încăperilor în gospodărie și nici pentru utilizarea comercială. Acest produs este prevăzut doar pentru utilizarea în gospodării private. O altă utilizare decât cea descrisă anterior sau o modificare a produsului nu este permisă și poate duce la deteriorarea sa sau chiar la vătămări corporale. Producătorul sau distribuitorul nu își asumă responsabilitatea pentru daune care intervin ca urmare a utilizării necorespunzătoare sau greșite.

Furnitura

1x lumânare pastilă decorativă cu LED
1x racletă pentru dovleac
1x ferăstrău mare
1x ferăstrău mic
1x creion
1x baterie (CR2032)
6x modele de sculptat
1x manual de utilizare

Descrierea componentelor

1 lumânare pastilă decorativă cu LED
2 creion
3 ferăstrău mic
4 ferăstrău mare
5 racletă pentru dovleac
6 modele de sculptat
7 baterii
8 modele de sculptat

Date tehnice

Număr model:	1183-11
Intrare:	1 x CR 2032, 3 V⎓; 0,08 W
Clasă de protecție:	III
Culoare lumină:	alb cald

Indicații de siguranță

Indicații de siguranță

PERICOL DE ACCIDENTARE ȘI DE DECES PENTRU COPII! Nu lăsați niciodată ambalajul la îndemâna copiilor nesupravegheați. Există pericol de sufocare din cauza materialelor de ambalare. Copiii subestimează adesea pericolele. Nu lăsați produsul niciodată la îndemâna copiilor.

- **Atenție!** A se utiliza doar sub supravegherea adulților.
- **Atenție!** Nu depozitați uneltele la îndemâna copiilor după folosire.
- Curățarea produsului și înlocuirea bateriilor nu se vor efectua de către copii.
- Produsul nu trebuie lăsat la îndemâna copiilor până când nu este îndepărtată banda de protecție din compartimentul cu baterii.
- Încetați utilizarea produsului, dacă observați orice fel de defecțiune.
- Protejați produsul de muchii ascuțite, sarcini mecanice și suprafețe fierbinți.
- Nu scufundați produsul în apă sau în alte lichide.
- LED-urile nu sunt înlocuibile.

Indicații de siguranță pentru baterii/acumulatori

- **PERICOL DE DECES!** Nu lăsați bateriile/acumulatorii la îndemâna copiilor. În caz de înghițire accidentală, adresați-vă imediat unui medic!
- **PERICOL DE EXPLOZIE!** Nu reîncărcați niciodată bateriile care nu sunt reîncărcabile. Nu scurtcircuitați bateriile/acumulatorii și nu încercați să le deschideți. Urmările acestor acțiuni pot fi supraîncălzirea, pericolul de incendiu sau pericolul de explozie.
- Nu aruncați niciodată bateriile/acumulatorii în foc sau apă.
- Nu supuneți bateriile/acumulatorii sarcinilor mecanice.
- A nu se utiliza tipuri diferite de baterii sau a nu se combina baterii noi cu unele consumate.
- Introduceți bateriile conform polarității în produs.
- Nu scurtcircuitați bornele!
- Îndepărtați bateriile consumate din produs.
- **Atenție!** Atenție! Acest produs conține o baterie tip pastilă (buton cu litiu). În cazul înghițirii o baterie tip pastilă poate cauza arsuri chimice grave.
- **Atenție!** Eliminați bateriile uzate în mod corespunzător. Nu lăsați bateriile la îndemâna copiilor! În cazul înghițirii unei baterii solicitați neîntârziat ajutorul unui medic.

Risc de scurgere al bateriilor/acumulatorilor

- Evitați condițiile extreme și temperaturile care pot afecta bateriile/acumulatorii, de ex. radiatoarele/lumina directă a razelor solare.
- Evitați contactul cu pielea, ochii sau mucoasa nazală! În caz de contact cu acidul scurs din baterii, spălați imediat zona afectată cu apă limpede din abundență și adresați-vă de îndată unui medic!
- **PURTAȚI MĂNUȘI DE PROTECȚIE!** Scurgerea bateriilor/acumulatorilor defecți poate provoca arsuri la contactul cu pielea. Din acest motiv, vă rugăm să purtați mănuși de protecție.
- În caz de scurgere a bateriilor, îndepărtați-le imediat din produs pentru a evita eventualele defecțiuni.

Punerea în funcțiune

Indicație: scoateți produsul din ambalaj și îndepărtați toate materialele de ambalare.
- Verificați integritatea furniturii.
- Verificați dacă produsul sau componentele individuale prezintă deteriorări. Dacă faceți o astfel de constatare nu folosiți produsul. Adresați-vă companiei care a introdus pe piață produsul la adresa de service menționată pe cardul de garanție.
- Produsul nu trebuie lăsat la îndemâna copiilor până când nu este îndepărtată banda de protecție din compartimentul cu baterii.
- Bateriile furnizate sunt deja introduse în produs și sunt prevăzute cu o bandă de protecție. Îndepărtați banda pentru a pune produsul în funcțiune.

Introducerea/înlocuirea bateriilor

- PERICOL DE DECES! Vă rugăm să vă asigurați că bateriile sunt înlocuite doar de către un adult, iar compartimentul pentru baterii este închis bine și în mod corespunzător. Înghițirea unei baterii poate avea urmări grave!

☐ Compartimentul pentru baterii se află pe partea inferioară a lumânării pastilă decorative cu LED 1 (a se vedea fig. B).
☐ Deschideți compartimentul pentru baterii prin deșurubarea șurubului și extrageți bateria descărcată.
☐ Introduceți acum o baterie nouă (CR2032).
☐ **Indicație:** aveți grijă la polaritatea corectă.
☐ Închideți capacul compartimentului pentru baterii și închideți cu șurubul compartimentul pentru baterii.

Operarea

ATENȚIE! Nu lăsați copiii nesupravegheați în timpul utilizării! A se utiliza doar în prezența unui adult.
Lumânare pastilă decorativă cu LED: Pe partea inferioară a lumânării pastilă decorative cu LED 1 (a se vedea fig. X) se află comutatorul ON/OFF. Împingeți comutatorul pe poziția ON pentru a porni produsul. Acum luminează flacăra cu funcție naturală de pâlpâire. Împingeți comutatorul pe poziția OFF pentru a opri din nou produsul.

ATENȚIE! Imediat ce lumina LED sau lumânarea pastilă decorativă cu LED este plasată în dovleac nu se mai poate decora dovleacul. Racletă pentru dovleac: racleta pentru dovleac 5 (a se vedea fig. A) servește la îndepărtarea părții interioare a dovleacului.
Ferăstrău mic/ferăstrău mare: Cu ferăstraiele 3 / 4 (a se vedea fig. A) puteți realiza lucrări de precizie.
Creion: Cu creionul 2 (a se vedea fig. A) puteți să transferați pe dovleac motivele modelelor de tăiere.

ATENȚIE! Când desenați cu creionul pe dovleac pentru a transfera modelele de sculptat sau pentru a crea modele proprii, dovleacul nu mai trebuie decorat. Modele de sculptat: Modelele de sculptat 6 simplifică realizarea propriului dovleac.

Curățarea și depozitarea

- Nu scufundați în apă lumânarea pastilă decorativă cu LED. Aveți grijă să nu ajungă apă în carcasă.

☐ Pentru curățare nu folosiți decât o lavetă uscată, fără scame. În cazul murdăriei mai persistente umeziți ușor laveta.
☐ În cazul neutilizării depozitați produsul într-un loc uscat în ambalajul său.
☐ Puteți curăța uneltele de sculptare 3 / 4 / 5 sub apă curentă. Nu utilizați agenți de curățare acizi.

Remedierea defecțiunilor

● = Defecțiune
◉ = Cauză
○ = Soluție

● = Lumânarea pastilă decorativă cu LED 1 nu pornește.
◉ = Produsul este oprit.
○ = Porniți produsul (a se vedea „Operarea")
◉ = Bateriile sunt descărcate.
○ = Înlocuiți bateriile (a se vedea „Înlocuirea bateriilor").

Eliminarea

Respectați marcajul ambalajelor la separarea deșeurilor. Acestea sunt notate cu prescurtări (a) și numere (b) având următoarele semnificații:
1–7: Plastice
20–22: Hârtie și carton
80–98: Materiale compozite

Vă puteți adresa administrației locale pentru a afla posibilitățile de eliminare a produsului.

În scopul protejării mediului înconjurător, nu aruncați produsul dumneavoastră la deșeuri menajere, după ce acesta și-a încheiat durata de viață, ci eliminați-l în mod corespunzător. Vă puteți adresa administrației localității dumneavoastră pentru a vă informa cu privire la locurile de colectare și orele acestora de deschidere.

Acumulatorii defecți sau uzați trebuie reciclați conform Directivei 2006/66/CE și amendamentelor sale. Returnați acumulatorii și/sau produsul prin facilitățile de colectare oferite

Eliminarea necorespunzătoare a acumulatorilor poate provoca daune mediului înconjurător!
Acumulatorii nu trebuie eliminați cu deșeurile menajere. Aceștia pot conține metale grele*) toxice și sunt supuși tratării deșeurilor speciale. Bateriile și acumulatorii neîncorporate în aparat trebuie îndepărtate înainte de eliminare și eliminate separat. Vă rugăm să eliminați bateriile și acumulatorii doar în stare descărcată! Dacă este posibil, utilizați acumulatori în locul bateriilor de unică folosință.
*) marcați prin: Cd = Cadmiu, Hg = Mercur, Pb = Plumb

Garanția

Stimate client, dispuneți de o garanție de 3 ani din momentul cumpărării acestui produs. În cazurile în care produsul vă este livrat cu defecțiuni, aveți drepturi legale față de vânzătorul produsului. Aceste drepturi legale nu sunt limitate de garanția prezentată mai jos.

Condiții de acordare a garanției
Perioada de garanție începe de la data cumpărării produsului. Vă rugăm să păstrați cu grijă bonul fiscal. Acest document servește ca dovadă de cumpărare. Dacă în decursul a trei ani de la data cumpărării apar defecțiuni de fabricare sau materiale, produsul va fi reparat, înlocuit sau vi se va rambursa prețul acestuia. Acordarea garanției presupune prezentarea aparatului defect și a dovezii cumpărării (bonului fiscal) în termen de trei ani și descrierea pe scurt în scris a defecțiunii și a momentului apariției acestuia. Daca defectul are acoperire în cadrul garanției, veți primi înapoi produsul reparat sau un altul nou. Repararea sau înlocuirea produsului nu reprezintă începerea unei noi perioade de garanție.

Perioada de garanție și solicitări legale privind defectele
Perioada de garanție nu se prelungește o dată cu acordarea acesteia. Acest lucru este valabil și pentru piese înlocuite sau reparate. Deteriorările sau defectele existente deja la cumpărare trebuie raportate imediat după dezambalare. Reparațiile necesare după expirarea perioadei de garanție se efectuează contra cost.

Volumul garanției
Aparatul a fost realizat cu grijă și în conformitate cu regulamente stricte privind calitatea și a fost minuțios verificat înainte de livrare. Serviciile acordate în baza garanției se aplică defecțiunilor de fabricare sau materiale. Această garanție nu acoperă piese ale produsului care sunt supuse unei uzuri normale și, prin urmare, pot fi considerate consumabile. De asemenea, garanția nu acoperă nici deteriorarea pieselor fragile, cum ar fi întrerupătoarele, acumulatorii sau cele realizate din sticlă. Această garanție devine nulă în cazurile în care produsul se defectează ca urmare a unei utilizări sau întrețineri necorespunzătoare. Pentru o utilizare corespunzătoare a produsului trebuie respectate cu strictețe toate indicațiile prezente în manualul de utilizare. Alte scopuri de utilizare și acțiuni nerecomandate sau asupra cărora se avertizează în manualul de utilizare trebuie evitate în mod obligatoriu. Produsul este prevăzut pentru uzul privat și nu pentru cel comercial. Garanția devine nulă în cazul manipulării abuzive și necorespunzătoare, aplicării forței și intervențiilor care nu au fost efectuate de către filiala noastră de service autorizată.

Derularea garanției
Pentru a asigura prelucrarea rapidă a cererii dumneavoastră, vă rugăm să respectați următoarele **Indicații:**
☐ Vă rugăm să păstrați bonul fiscal și numărul articolului (ex. IAN 123456) ca dovadă a cumpărării în cazul solicitărilor ulterioare.
☐ Numărul articolului se găsește pe plăcuța tip a produsului, gravura produsului, coperta interioară a manualului (stânga jos) sau pe eticheta de pe partea posterioară sau inferioară a produsului.
☐ În cazul unor defecțiuni funcționale sau altor defecțiuni contactați telefonic sau prin e-mail departamentul de service menționat în cele ce urmează.
☐ Puteți trimite produsul considerat defect cu anexarea dovezii cumpărării (bonul fiscal) și mențiunea în scris atât a defectului, cât și a momentului în care a apărut, cu scutire de taxe poștale, la adresa de service indicată.

(3) Timpul de nefuncționare din cauza lipsei de conformitate apărute în cadrul termenului de garanție prelungește termenul de garanție legală de conformitate și cel al garanției comerciale și curge, după caz, din momentul la care a fost adusă la cunoștința vânzătorului lipsa de conformitate a produsului sau din momentul prezentării produsului la vânzător/unitatea service până la aducerea produsului în stare de utilizare normală și, respectiv, al notificării în scris în vederea ridicării produsului sau predării efective a produsului către consumator.

(4) Produsele de folosință îndelungată care înlocuiesc produsele defecte în cadrul termenului de garanție vor beneficia de un nou termen de garanție care curge de la data preschimbării produsului.

Service

(RO)
Service România
Tel.: 00800 80040044
E-mail: administration@mynetsend.de

IAN 448081_2301

Vă rugăm să păstrați bonul de casă și numărul articolului (ex. IAN 123456) ca dovadă a achiziției în cazul în care veți avea întrebări ulterioare.

Găsiți o versiune actuală a manualului de utilizare pe: www.citygate24.de

De pe **www.lidl-service.com** puteți descărca acest manual de utilizare, precum și alte manuale, videoclipuri cu produse și software de instalare.
Codul QR de pe copertă vă va duce direct la pagina de servicii Lidl (www.lidl-service.com) și, introducând numărul articolului (IAN) 123456_7890, puteți vizualiza și descărca manualul de utilizare integral.

(GR) (CY)

Σετ εργαλεία για σκάλισμα και καθαρισμό κολοκύθας

Εισαγωγή

Σας συγχαίρουμε για την αγορά του νέου σας προϊόντος. Αποφασίσατε να αγοράσετε ένα προϊόν ύψιστης ποιότητας. Διαβάστε αυτές τις οδηγίες χρήσης πλήρως και προσεκτικά. Οι παρούσες οδηγίες ανήκουν στο προϊόν και εμπεριέχουν σημαντικές υποδείξεις για τη θέση σε λειτουργία και τον χειρισμό. Τηρείτε πάντα όλες τις υποδείξεις ασφαλείας. Εάν έχετε ερωτήσεις ή δεν είστε σίγουροι για τον τρόπο χρήσης του προϊόντος, επικοινωνήστε με τον πωλητή σας ή με το σέρβις. Φυλάξτε αυτές τις οδηγίες επιμελώς και διαβιβάστε τες αν χρειαστεί και σε τρίτους.

Εξήγηση συμβόλων

Διαβάστε τις οδηγίες χρήσης!

Ημερομηνία έκδοσης των οδηγιών χρήσης (μήνας/έτος)

Ημερομηνία κατασκευής (μήνας/έτος)

Συνεχής τάση

Κίνδυνος θανάτου και ατυχήματος για βρέφη και παιδιά!

Τηρείτε τις υποδείξεις κινδύνου και ασφαλείας!

Κίνδυνος έκρηξης!

Φοράτε προστατευτικά γάντια!

Αυτό το σύμβολο υποδηλώνει πως το προϊόν λειτουργεί με πολύ χαμηλή τάση ασφαλείας (SELV / PELV) (κατηγορία προστασίας III).

Ενδείκνυται μόνο για εσωτερικούς χώρους

Περιλαμβάνεται 1 μπαταρία CR2032

Περιλαμβάνεται μπαταρία

Να φυλάσσεται μακριά από παιδιά

Μην ασκείτε βία!

Ποτέ μην χρησιμοποιείτε ταυτόχρονα διαφορετικά συστήματα, μάρκες και τύπους!

Μην τοποθετείτε το καλώδιο ανάποδα, τηρείτε την πολικότητα(+ / -)!

Μην το ρίχνετε στη φωτιά!

Μην το ρίχνετε στο νερό!

Μην βραχυκυκλώνετε! - Οι μπαταρίες μπορεί να εκραγούν ή να διαρρεύσουν.

Ποτέ μην αναμειγνύετε νέες και μεταχειρισμένες μπαταρίες!

Μην επαναφορτίζετε!

Μην αποσυναρμολογείτε / ανοίγετε!

Απορρίψτε τη συσκευασία και το προϊόν με τρόπο φιλικό προς το περιβάλλον!

Ζημιές στο περιβάλλον σε περίπτωση λανθασμένης απόρριψης των μπαταριών/συσσωρευτών!

Συσκευασία από ανάμεικτο ξύλο με πιστοποίηση FSC

Με τη σήμανση CE, ο κατασκευαστής βεβαιώνει ότι το παρόν προϊόν ανταποκρίνεται στις ισχύουσες ευρωπαϊκές οδηγίες.

Προβλεπόμενη χρήση

Κατάλληλο μόνο για παιδιά ηλικίας 12 ετών και άνω.
Αυτό το προϊόν ενδείκνυται μόνο για διακοσμητικούς σκοπούς. Το παρόν προϊόν είναι κατάλληλο μόνο για χρήση σε εσωτερικούς χώρους, σε στεγνά και κλειστά δωμάτια. Το διακοσμητικό ρεσό LED μπαταρίας δεν πρέπει να τοποθετείται στην κολοκύθα εάν αυτή βρίσκεται εκτός κλειστών χώρων. Δεν ενδείκνυται για τον φωτισμό σε οικιακούς χώρους ή για εμπορική χρήση. Αυτό το προϊόν προορίζεται μόνο για οικιακή χρήση. Διαφορετική χρήση από αυτήν που προαναφέρεται ή οποιαδήποτε τροποποίηση του προϊόντος δεν επιτρέπεται και μπορεί να οδηγήσει σε υλικές ζημιές ή ακόμη και σε σωματικές βλάβες. Ο κατασκευαστής ή ο έμπορος δεν αναλαμβάνει καμία ευθύνη για ζημιές, οι οποίες οφείλονται στη μη προβλεπόμενη ή λανθασμένη χρήση.

Περιεχόμενο συσκευασίας

1 διακοσμητικό ρεσό LED μπαταρίας
1 σπάτουλα κολοκύθας
1 μεγάλο πριόνι
1 μικρό πριόνι
1 στυλό
1 μπαταρία (CR2032)
6 σχέδια σκαλίσματος
1 εγχειρίδιο χρήσης

Περιγραφή εξαρτημάτων

1 διακοσμητικό ρεσό LED μπαταρίας
2 στυλό
3 μικρό πριόνι
4 μεγάλο πριόνι
5 σπάτουλα κολοκύθας
6 σχέδια σκαλίσματος
7 μπαταρία
8 σχέδια σκαλίσματος

Τεχνικά στοιχεία

Αριθμός μοντέλου:	1183-11
Είσοδος:	1 x CR 2032, 3 V⎓; 0,08 W
Κατηγορία προστασίας:	III
Χρώμα φωτισμού:	θερμό λευκό

Υποδείξεις ασφαλείας

Υποδείξεις ασφαλείας

ΚΙΝΔΥΝΟΣ ΘΑΝΑΤΟΥ ΚΑΙ ΑΤΥΧΗΜΑΤΟΣ ΓΙΑ ΒΡΕΦΗ ΚΑΙ ΠΑΙΔΙΑ! Μην αφήνετε ποτέ τα παιδιά μόνα τους με τα υλικά συσκευασίας. Υφίσταται κίνδυνος ασφυξίας μέσω των υλικών συσκευασίας. Τα παιδιά συχνά υποτιμούν τους κινδύνους. Κρατάτε πάντα τα παιδιά μακριά από το προϊόν.

- **Προσοχή!** Χρήση μόνο υπό την επίβλεψη ενήλικα.
- **Προσοχή!** Μετά τη χρήση, φυλάσσετε τα εργαλεία μακριά από τα παιδιά.
- Ο καθαρισμός και η αντικατάσταση μπαταριών δεν πρέπει να πραγματοποιείται από παιδιά.
- Κρατήστε το προϊόν μακριά από τα παιδιά, εάν δεν έχετε αφαιρέσει την προστατευτική ταινία από την υποδοχή μπαταριών.
- Μη χρησιμοποιείτε το προϊόν, εάν διαπιστώσετε οποιαδήποτε βλάβη.
- Προστατεύετε το προϊόν από αιχμηρές ακμές, μηχανικές καταπονήσεις και υπέρθερμες επιφάνειες.
- Μη βυθίζετε το προϊόν σε νερό ή άλλα υγρά.
- Τα LED δεν αντικαθίστανται.

Υποδείξεις ασφαλείας για μπαταρίες/συσσωρευτές

- **ΚΙΝΔΥΝΟΣ ΘΑΝΑΤΟΥ!** Κρατάτε τις μπαταρίες/τους συσσωρευτές μακριά από τα παιδιά. Απευθυνθείτε αμέσως σε γιατρό σε περίπτωση κατάποσης!!
- **ΚΙΝΔΥΝΟΣ ΕΚΡΗΞΗΣ!** Ποτέ μην επαναφορτίσετε μη επαναφορτιζόμενες μπαταρίες. Μη βραχυκυκλώνετε ή/και μην ανοίγετε τις μπαταρίες/τους συσσωρευτές. Μπορεί να προκληθεί υπερθέρμανση, κίνδυνος πυρκαγιάς ή έκρηξη.
- Μην πετάτε ποτέ μπαταρίες/συσσωρευτές στη φωτιά ή στο νερό.
- Μην εκθέτετε μπαταρίες/συσσωρευτές σε μηχανικές καταπονήσεις.
- Μη χρησιμοποιείτε διαφορετικούς τύπους μπαταριών ή νέες και χρησιμοποιημένες μπαταρίες μαζί.
- Τοποθετήστε τις παρεχόμενες μπαταρίες στο προϊόν σύμφωνα με την πολικότητά τους.
- Οι ακροδέκτες δεν πρέπει να βραχυκυκλώνονται!
- Αφαιρέστε τις άδειες μπαταρίες από το προϊόν.
- **Προσοχή!** Αυτό το προϊόν περιέχει μία μπαταρία κουμπί (ηλεκτρική στήλη τύπου κομβίου με λίθιο). Η κατάποση μιας μπαταρίας κουμπί μπορεί να προκαλέσει σοβαρά εσωτερικά χημικά εγκαύματα.
- **Προσοχή!** Απορρίψτε αμέσως τις χρησιμοποιημένες μπαταρίες. Κρατήστε τις μπαταρίες μακριά από παιδιά! Σε περίπτωση κατάποσης μπαταρίας, αναζητήστε αμέσως ιατρική βοήθεια.

Κίνδυνος εκροής μπαταριών/συσσωρευτών

- Αποφεύγετε υπερβολικές συνθήκες και θερμοκρασίες που θα μπορούσαν να επιδράσουν σε μπαταρίες/συσσωρευτές π.χ. σε καλοριφέρ/άμεση ηλιακή ακτινοβολία.
- Αποφεύγετε την επαφή με δέρμα, μάτια και βλεννογόνους! Σε περίπτωση επαφής με το οξύ της μπαταρίας, ξεπλύνετε αμέσως τα σημεία επαφής με άφθονο καθαρό νερό και επισκεφθείτε αμέσως έναν γιατρό!
- **ΦΟΡΑΤΕ ΠΡΟΣΤΑΤΕΥΤΙΚΑ ΓΑΝΤΙΑ!** Οι διαρρέουσες ή χαλασμένες μπαταρίες/συσσωρευτές μπορεί να προκαλέσουν εγκαύματα αν έρθουν σε επαφή με το δέρμα. Γι' αυτό, φοράτε σε αυτή την περίπτωση κατάλληλα προστατευτικά γάντια.
- Σε περίπτωση διαρροής των μπαταριών, αφαιρέστε τες αμέσως από το προϊόν ώστε να αποφευχθούν ζημίες.

Θέση σε λειτουργία

Υπόδειξη: Αφαιρέστε το προϊόν από τη συσκευασία και απομακρύνετε όλα τα υλικά συσκευασίας.
- Ελέγξτε την πληρότητα της παράδοσης.
- Ελέγξτε αν το προϊόν ή τα επιμέρους εξαρτήματα παρουσιάζουν ζημιές. Αν συμβαίνει κάτι τέτοιο, μη χρησιμοποιήσετε το προϊόν. Επικοινωνήστε με τον διανομέα μέσω της διεύθυνσης σέρβις που αναγράφεται στην κάρτα εγγύησης.
- Κρατήστε το προϊόν μακριά από τα παιδιά, εάν δεν έχετε αφαιρέσει την προστατευτική ταινία από την υποδοχή μπαταριών.
- Οι παρεχόμενες μπαταρίες είναι ήδη τοποθετημένες στο προϊόν και φέρουν μια προστατευτική ταινία. Αφαιρέστε τη για να θέσετε το προϊόν σε λειτουργία.

Τοποθέτηση/αντικατάσταση μπαταριών

- **ΚΙΝΔΥΝΟΣ ΘΑΝΑΤΟΥ!** Φροντίζετε να αντικαθίστανται οι μπαταρίες μόνο από ενήλικα και να κλείνει σωστά και καλά η υποδοχή μπαταριών. Η κατάποση μιας μπαταρίας μπορεί να αποβεί επικίνδυνη για τη ζωή!

☐ Η υποδοχή μπαταρίας βρίσκεται στην κάτω πλευρά του διακοσμητικού ρεσό LED μπαταρίας 1 (βλ. εικ. A).
☐ Ανοίξτε την υποδοχή μπαταρίας χαλαρώνοντας τη βίδα και αφαιρέστε την άδεια μπαταρία.
☐ Τοποθετήστε μια καινούργια μπαταρία (CR2032).
☐ **Υπόδειξη:** Λάβετε υπόψη τη σωστή πολικότητα.
☐ Κλείστε το κάλυμμα της υποδοχής μπαταρίας και σφίξτε ξανά τη βίδα στην υποδοχή μπαταρίας.

Λειτουργία

ΠΡΟΣΟΧΗ! Μην αφήνετε ποτέ τα παιδιά χωρίς επίβλεψη κατά τη διάρκεια της χρήσης! Χρήση του προϊόντος μόνο με την παρουσία ενήλικα.

Διακοσμητικό ρεσό LED μπαταρίας: Ο διακόπτης ON/OFF βρίσκεται στην κάτω πλευρά του διακοσμητικού ρεσό LED μπαταρίας 1 (βλ. εικ. X). Μετακινήστε τον διακόπτη στη θέση «ON» για να ενεργοποιήσετε το προϊόν. Τώρα η φλόγα ανάβει με λειτουργία φυσικού τρεμοπαίγματος. Μετακινήστε τον διακόπτη στη θέση «OFF» για να απενεργοποιήσετε ξανά το προϊόν.

ΠΡΟΣΟΧΗ! Μετά την τοποθέτηση του φωτός LED ή του διακοσμητικού ρεσό LED μπαταρίας στην κολοκύθα, δεν επιτρέπεται πλέον η κατανάλωση της κολοκύθας. Σπάτουλα κολοκύθας: Η σπάτουλα κολοκύθας 5 (βλ. εικ. A) χρησιμοποιείται για την αφαίρεση του εσωτερικού της κολοκύθας.
Μικρό πριόνι/Μεγάλο πριόνι: Με τα πριόνια 3 / 4 μπορείτε να επεξεργαστείτε την κολοκύθα με μεγαλύτερη λεπτομέρεια (βλ. εικ. A).
Στυλό: Με το στυλό 2 (βλ. εικ. A) μπορείτε να μεταφέρετε τα μοτίβα των σχεδίων σκαλίσματος πάνω στην κολοκύθα.

ΠΡΟΣΟΧΗ! Μετά τη σχεδίαση της κολοκύθας με το στυλό για να μεταφέρετε τα σχέδια σκαλίσματος ή να δημιουργήσετε τα δικά σας, δεν επιτρέπεται πλέον η κατανάλωση της κολοκύθας. Σχέδια σκαλίσματος: Τα σχέδια σκαλίσματος 6 σάς βοηθούν να σχεδιάσετε εύκολα τη δική σας κολοκύθα.

Καθαρισμός και αποθήκευση

- Μη βυθίζετε το διακοσμητικό ρεσό LED μπαταρίας σε νερό. Βεβαιωθείτε ότι δεν εισέρχεται νερό στο περίβλημα.

☐ Για τον καθαρισμό χρησιμοποιείτε ένα στεγνό πανί χωρίς χνούδια. Σε περίπτωση έντονης ακαθαρσίας, βρέξτε ελαφρώς το πανί.
☐ Φυλάσσετε το προϊόν σε στεγνό μέρος μέσα στη συσκευασία του, όταν δεν το χρησιμοποιείτε.
☐ Μπορείτε να καθαρίσετε τα εργαλεία σκαλίσματος 3 / 4 / 5 κάτω από τρεχούμενο νερό. Μη χρησιμοποιείτε λειαντικά καθαριστικά.

Αντιμετώπιση προβλημάτων

● = Πρόβλημα
◉ = Αιτία
○ = Λύση

● = Το διακοσμητικό ρεσό LED μπαταρίας 1 δεν ανάβει.
◉ = Το προϊόν είναι απενεργοποιημένο.
○ = Ενεργοποιήστε το προϊόν (βλ. «Λειτουργία»)
◉ = Οι μπαταρίες είναι άδειες.
○ = Αντικαταστήστε τις μπαταρίες (βλ. «Αντικατάσταση μπαταριών»).

Απόρριψη

Δώστε προσοχή στην επισήμανση των υλικών συσκευασίας κατά τη διαλογή των απορριμμάτων, τα οποία φέρουν τις συντομογραφίες (a) και τους αριθμούς (b) με την εξής σημασία:
1–7: Πλαστικά
20–22: Χαρτί και χαρτόνι
80–98: Συνθετικά υλικά

Για τις δυνατότητες απόρριψης του άχρηστου πλέον προϊόντος, μπορείτε να ενημερωθείτε από την κοινοτική ή δημοτική αρχή.

Για λόγους προστασίας του περιβάλλοντος, μην πετάξετε το πλέον άχρηστο προϊόν στα οικιακά απορρίμματα, αλλά φροντίστε για την κατάλληλη απόρριψή του. Για τα κατάλληλα σημεία συλλογής και τις ώρες λειτουργίας τους, μπορείτε να ενημερωθείτε από την αρμόδια αρχή της περιοχής σας.

Οι ελαπωματικοί ή χρησιμοποιημένοι συσσωρευτές πρέπει να ανακυκλώνονται σύμφωνα με την οδηγία 2006/66/ΕΚ και τις τροποποιήσεις αυτής. Επιστρέψτε τους συσσωρευτές και/ή το προϊόν μέσω των διαθέσιμων εγκαταστάσεων συλλογής.

Περιβαλλοντικές ζημιές από λανθασμένη απόρριψη των συσσωρευτών!
Οι συσσωρευτές δεν επιτρέπεται να απορρίπτονται στα οικιακά απορρίμματα. Μπορεί να περιέχουν τοξικά βαρέα μέταλλα*) και υπόκεινται στην επεξεργασία επικίνδυνων αποβλήτων. Οι μπαταρίες και οι συσσωρευτές που δεν είναι μόνιμα εγκατεστημένοι στη συσκευή πρέπει να αφαιρούνται και να απορρίπτονται ξεχωριστά πριν από την απόρριψη. Παραδώστε τις μπαταρίες και τους συσσωρευτές μόνο όταν βρίσκονται σε αποφορτισμένη κατάσταση! Εάν είναι δυνατόν, χρησιμοποιείτε συσσωρευτές αντί για μπαταρίες μίας χρήσης. *) επισημαίνονται με: Cd = κάδμιο, Hg = υδράργυρος, Pb = μόλυβδος

Εγγύηση

Αξιότιμη πελάτισσα, αξιότιμε πελάτη, για τη συσκευή αυτή σας παρέχεται 3 χρόνια εγγύηση από την ημερομηνία αγοράς. Σε περίπτωση ελαττωμάτων αυτού του προϊόντος, έχετε νόμιμα δικαιώματα κατά του πωλητή του προϊόντος. Αυτά τα νόμιμα δικαιώματα δεν περιορίζονται από την εγγύηση, στην οποία αναφερόμαστε παρακάτω.

Όροι εγγύησης
Η προθεσμία της εγγύησης αρχίζει με την ημερομηνία της αγοράς. Παρακαλώ φυλάξτε καλά την απόδειξη αγοράς. Απαιτείται ως απόδειξη για την αγορά. Εάν προκύψει εντός τριών ετών από την ημερομηνία της αγοράς κάποιο ελάττωμα υλικού ή παραγωγής, τότε το προϊόν θα διορθωθεί ή θα αντικατασταθεί από εμάς ή θα επιστρέψουμε το ποσό αγοράς. Αυτός ο όρος εγγύησης προϋποθέτει, ότι εντός της προθεσμίας τριών ετών θα προσκομιστούν η ελαττωματική συσκευή και το αποδεικτικό αγοράς (παραστατικό) και ότι περιγράφεται σύντομα εγγράφως η έλλειψη και πότε παρουσιάστηκε. Αν η βλάβη καλύπτεται από την εγγύησή μας, θα λάβετε το επισκευασμένο ή ένα νέο προϊόν. Με την επισκευή ή αντικατάσταση του προϊόντος δεν ξεκινά μια νέα διάρκεια εγγύησης.

Διάρκεια εγγύησης και νομικές αξιώσεις ελλείψεων
Η διάρκεια εγγύησης δεν παρατείνεται από την παροχή εγγύησης. Αυτό ισχύει επίσης για εξαρτήματα που έχουν αντικατασταθεί ή επισκευαστεί. Ζημιές και ελλείψεις που πιθανόν να υπάρχουν ήδη κατά την αγορά πρέπει να γνωστοποιηθούν αμέσως μετά την αφαίρεση από τη συσκευασία. Μετά τη λήξη της διάρκειας εγγύησης οι επισκευές χρεώνονται.

Περιεχόμενο εγγύησης
Η συσκευή κατασκευάστηκε προσεκτικά σύμφωνα με αυστηρές οδηγίες ποιότητας και δοκιμάστηκε σχολαστικά πριν από την παράδοση. Η παροχή εγγύησης ισχύει για βλάβες υλικού ή παραγωγής. Η εγγύηση αυτή δεν επεκτείνεται σε εξαρτήματα του προϊόντος, τα οποία εκτίθενται στην κανονική φθορά και έτσι θεωρούνται αναλώσιμα υλικά και ούτε σε βλάβες σε εύθραυστα τμήματα, π.χ. διακόπτες, συσσωρευτές ή εξαρτήματα από γυαλί. Αυτή η εγγύηση παύει να ισχύει, εάν το προϊόν φέρει βλάβη, δεν χρησιμοποιήθηκε κατάλληλα και δεν συντηρήθηκε. Για την προβλεπόμενη χρήση του προϊόντος πρέπει να τηρούνται επακριβώς όλες οι υποδείξεις που περιγράφονται στις οδηγίες χρήσης. Σκοποί χρήσης και ενέργειες, που δεν συνιστώνται από τις οδηγίες χρήσης, πρέπει οπωσδήποτε να αποφεύγονται. Το προϊόν προορίζεται αποκλειστικά για ιδιωτική και όχι για επαγγελματική χρήση. Σε περίπτωση κατάχρησης ή λανθασμένης χρήσης, άσκηση βίας και επεμβάσεων, που δεν πραγματοποιούνται από την εξουσιοδοτημένη αντιπροσωπεία σέρβις, παύει να ισχύει η εγγύηση.

Διεκπεραίωση σε περίπτωση εγγύησης
Για τη γρήγορη επεξεργασία του αιτήματός σας παρακαλούμε ακολουθήστε τις παρακάτω **Υποδείξεις:**
☐ Παρακαλώ να έχετε μαζί σας για ενδεχόμενες ερωτήσεις την απόδειξη ταμείου και τον αριθμό προϊόντος (π.χ. IAN 123456) ως απόδειξη αγοράς.
☐ Ο αριθμός προϊόντος αναγράφεται στην πινακίδα τύπου του προϊόντος, στην εγχάραξη στο προϊόν, στο φύλλο τίτλου των οδηγιών (κάτω αριστερά) ή στο αυτοκόλλητο στην πίσω ή κάτω πλευρά του προϊόντος.
☐ Αν παρουσιαστούν δυσλειτουργίες ή άλλες ελλείψεις, επικοινωνήστε αρχικά τηλεφωνικά ή μέσω e-mail με το παρακάτω τμήμα σέρβις.
☐ Ένα προϊόν που διαπιστώνεται ως ελαπωματικό μπορεί μαζί με το αποδεικτικό αγοράς (παραστατικό) και την περιγραφή της έλλειψης και πότε παρουσιάστηκε να σταλεί χωρίς έξοδα αποστολής στην αναφερόμενη διεύθυνση σέρβις.

Με την αντικατάσταση της συσκευής, σύμφωνα με το ΝΟΜΟΣ 2251/1994, ξεκινάει εκ νέου ο χρόνος εγγύησης.

Σέρβις

(GR)
Σέρβις Ελλάδα
Tel. : 00800 80040044
E-Mail: administration@mynetsend.de
(CY)
Σέρβις Κύπρος
Tel. : 00800 80040044
E-Mail: administration@mynetsend.de

IAN 448081_2301

Παρακαλώ να έχετε μαζί σας για ενδεχόμενες ερωτήσεις την απόδειξη ταμείου και τον αριθμό προϊόντος (π.χ. IAN 123456) ως απόδειξη αγοράς.

Μπορείτε να βρείτε την τρέχουσα έκδοση των οδηγιών χρήσης στον διαδικτυακό τόπο: www.citygate24.de

Στη διεύθυνση **www.lidl-service.com** μπορείτε να κατεβάσετε αυτό και πολλά άλλα εγχειρίδια, βίντεο προϊόντων και λογισμικό εγκατάστασης.
Με τον κωδικό QR στο εξώφυλλο θα μεταφερθείτε απευθείας στη σελίδα εξυπηρέτησης της Lidl (www.lidl-service.com) και μπορείτε να ανοίξετε το εγχειρίδιο λειτουργίας πληκτρολογώντας τον αριθμό προϊόντος (IAN) 123456_7890.

(DE) (AT) (CH)

Kürbis-Schnitzset

Einleitung

Wir beglückwünschen Sie zum Kauf Ihres neuen Produkts. Sie haben sich damit für ein hochwertiges Produkt entschieden. Bitte lesen Sie diese Bedienungsanleitung vollständig und sorgfältig durch. Diese Anleitung gehört zu diesem Produkt und enthält wichtige Hinweise zur Inbetriebnahme und Handhabung. Beachten Sie immer alle Sicherheitshinweise. Sollten Sie Fragen haben oder unsicher in Bezug auf die Handhabung des Produkts sein, setzen Sie sich bitte mit Ihrem Händler oder der Servicestelle in Verbindung. Bewahren Sie diese Anleitung bitte sorgfältig auf und geben Sie sie ggf. an Dritte weiter.

Zeichenerklärung

Bedienungsanleitung lesen!

Ausgabedatum der Bedienungsanleitung (Monat/Jahr)

Herstellungsdatum (Monat/Jahr)

Gleichspannung

Lebens- und Unfallgefahr für Kleinkinder und Kinder!

Warn- und Sicherheitshinweise beachten!

Explosionsgefahr!

Schutzhandschuhe tragen!

Dieses Symbol bedeutet, dass das Produkt mit Schutzkleinspannung (SELV / PELV) arbeitet (Schutzklasse III).

Nur für den Innenraum geeignet

Inklusive 1x CR2032 Batterien

Inklusive Batterie

Außerhalb der Reichweite von Kindern aufbewahren

Keine Gewalt anwenden!

Nie verschiedene Systeme, Marken und Typen gleichzeitig verwenden!

Nicht falsch herum einsetzen, Polarität (+ / -) beachten!

Nicht ins Feuer werfen!

Nicht ins Wasser werfen!

Nicht kurzschließen! Batterien können explodieren oder undicht werden.

Nie neue und gebrauchte Batterien mischen!

Nicht wieder aufladen!

Nicht zerlegen / öffnen!

Entsorgen Sie Verpackung und Produkt umweltgerecht!

Umweltschäden durch falsche Entsorgung der Batterien / Akkus!

Verpackung aus FSC- zertifiziertem Mix-Holz

Mit der CE-Kennzeichnung bestätigt der Hersteller, dass dieses Produkt den geltenden europäischen Richtlinien entspricht.

Bestimmungsgemäße Verwendung

Nur geeignet für Kinder ab 12 Jahren.
Dieses Produkt ist ausschließlich für Dekorationszwecke geeignet. Dieses Produkt ist ausschließlich für den Betrieb im Innenbereich, in trockenen und geschlossenen Räumen geeignet. Das LED-Deko-TeeLicht darf nicht im Kürbis platziert werden, wenn dieser sich außerhalb geschlossener Räume befindet. Das Produkt ist nicht für die Raumbeleuchtung im Haushalt sowie für den kommerziellen Gebrauch geeignet. Dieses Produkt ist nur für den Einsatz in privaten Haushalten vorgesehen. Eine andere Verwendung als zuvor beschrieben oder eine Veränderung des Produkts ist nicht zulässig und kann zu Sachschäden oder sogar zu Personenschäden führen. Der Hersteller oder Händler übernimmt keine Haftung für Schäden, die durch nicht bestimmungsgemäßen oder falschen Gebrauch entstanden sind.

Lieferumfang

1x LED-Deko-Teelicht
1x Kürbisschaber
1x Große Säge
1x Kleine Säge
1x Stift
1x Batterie (CR2032)
6x Schnitzvorlagen
1x Bedienungsanleitung

Teilebeschreibung

1 LED-Deko-Teelicht
2 Stift
3 Kleine Säge
4 Große Säge
5 Kürbisschaber
6 Schnitzvorlagen
7 Batterie
8 Schnitzvorlagen

Technische Daten

Modellnummer:	1183-11
Eingang:	1 x CR 2032, 3 V⎓; 0,08 W
Schutzklasse:	III
Lichtfarbe:	warmweiß

Sicherheitshinweise

Sicherheitshinweise

LEBENS- UND UNFALLGEFAHR FÜR KLEINKINDER UND KINDER! Lassen Sie Kinder niemals unbeaufsichtigt mit dem Verpackungsmaterial. Es besteht Erstickungsgefahr durch Verpackungsmaterial. Kinder unterschätzen häufig die Gefahren. Halten Sie Kinder stets vom Produkt fern.

- **Achtung!** Nur unter Aufsicht von Erwachsenen benutzen.
- **Achtung!**Werkzeuge nach Einsatz außerhalb der Reichweite von Kindern lagern.
- Reinigung und Batteriewechsel dürfen nicht von Kindern durchgeführt werden.
- Halten Sie das Produkt fern von Kindern, solange Sie den Schutzstreifen beim Batteriefach nicht entfernt haben.
- Verwenden Sie das Produkt nicht, wenn Sie irgendwelche Beschädigungen feststellen.
- Schützen Sie das Produkt vor scharfen Kanten, mechanischen Belastungen und heißen Oberflächen.
- Tauchen Sie das Produkt nicht in Wasser oder andere Flüssigkeiten.
- Die LEDs sind nicht austauschbar.

Sicherheitshinweise für Batterien / Akkus

- **LEBENSGEFAHR!** Halten Sie Batterien / Akkus außer Reichweite von Kindern. Suchen Sie im Falle eines Verschluckens sofort einen Arzt auf!
- **EXPLOSIONSGEFAHR!** Laden Sie nicht aufladbare Batterien niemals wieder auf. Schließen Sie Batterien/ Akkus nicht kurz und/oder öffnen Sie diese nicht. Überhitzung, Brandgefahr oder Platzen können die Folge sein.
- Werfen Sie Batterien / Akkus niemals in Feuer oder Wasser.
- Setzen Sie Batterien / Akkus keiner mechanischen Belastung aus.
- Ungleiche Batterietypen oder neue und gebrauchte Batterien dürfen nicht zusammen verwendet werden.
- Legen Sie die beiliegenden Batterien gemäß ihrer Polarität in das Produkt ein.
- Die Anschlussklemmen dürfen nicht kurzgeschlossen werden!
- Entfernen Sie leere Batterien aus dem Produkt.
- **Achtung!** Dieses Produkt enthält eine Münzbatterie (Knopfzelle mit Lithium). Eine Münzbatterie kann bei Verschlucken schwerwiegende innere chemische Verbrennungen verursachen.
- **Achtung!** Entsorgen Sie gebrauchte Batterien umgehend. Batterien von Kindern fernhalten! Sofort einen Arzt aufsuchen, wenn eine Batterie verschluckt wurde.

Risiko des Auslaufens von Batterien / Akkus

- Vermeiden Sie extreme Bedingungen und Temperaturen, die auf Batterien / Akkus einwirken können, z. B. auf Heizkörpern / direkte Sonneneinstrahlung.
- Vermeiden Sie den Kontakt mit Haut, Augen und Schleimhäuten! Spülen Sie bei Kontakt mit Batteriesäure die betroffenen Stellen sofort mit reichlich klarem Wasser und suchen Sie umgehend einen Arzt auf!
- **SCHUTZHANDSCHUHE TRAGEN!** Ausgelaufene oder beschädigte Batterien / Akkus können bei Berührung mit der Haut Verätzungen verursachen.Tragen Sie deshalb in diesem Fall geeignete Schutzhandschuhe.
- Im Falle eines Auslauf